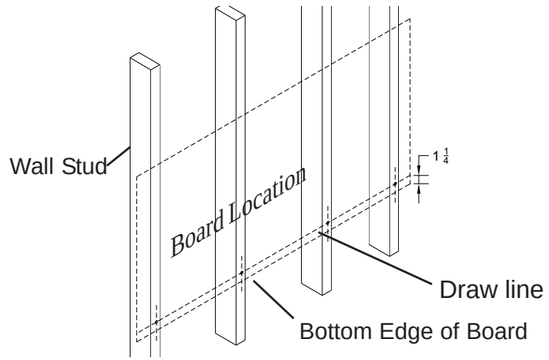

1 Determine board location. Measure from floor to the bottom edge of board. Mark with pencil line the corner location. Measure up from bottom edge of board 1-1/4", and draw line as shown. Locate stud near each end of board and drill pilot holes along line using 1/8" drill bit.

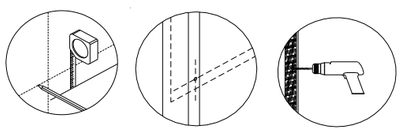

Note:
Install Masonry Anchors (D) into 1/4" Diameter predrill holes for masonry walls.

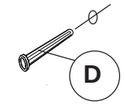

Install Drywall Anchors (E) into 1/4" Diameter predrill holes for sheet rock walls.

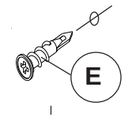

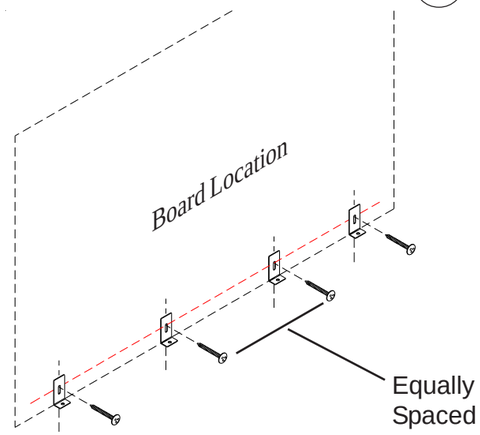

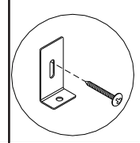

2 Attach ½ the # of Angle Brackets using Long Screws (B) as shown.

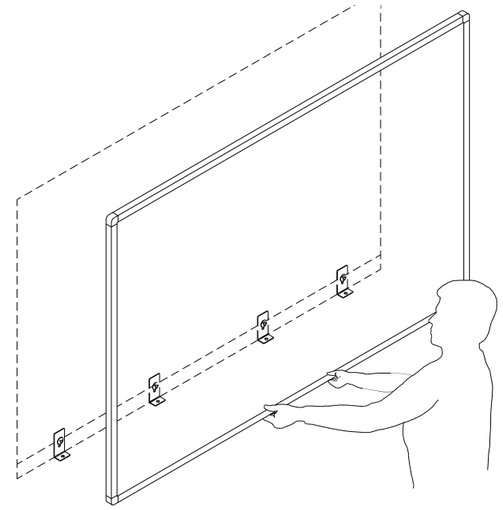

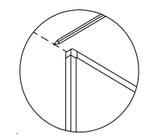

3 Set board on the Angle Brackets. Draw line along top edge of board.

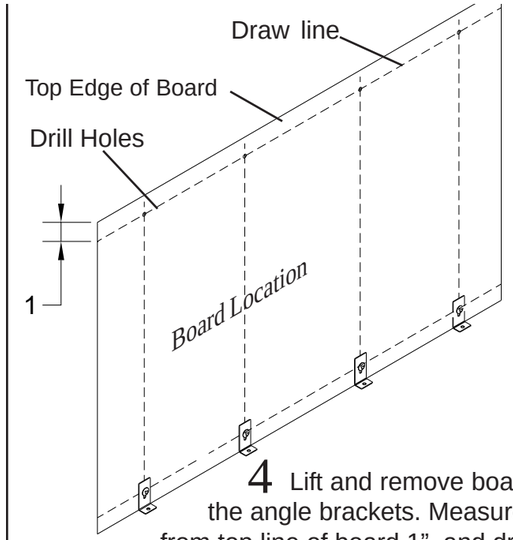

4 Lift and remove board from the angle brackets. Measure down from top line of board 1", and draw line as shown. Locate stud near each end of board and drill pilot hole along line using 1/8" drill bit.

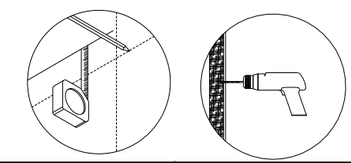

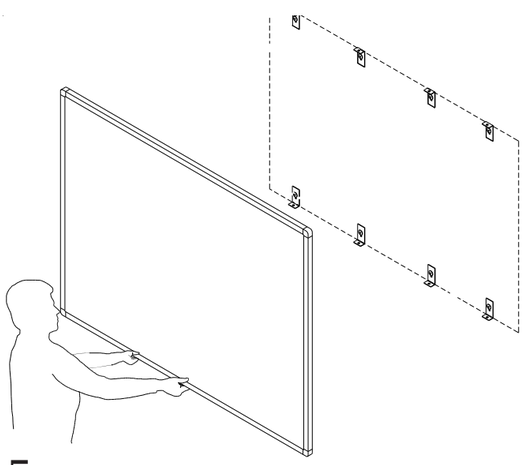

5 Secure top Angle Brackets (A) to the wall using long screws (B) as shown. Set board on the bottom angle brackets.

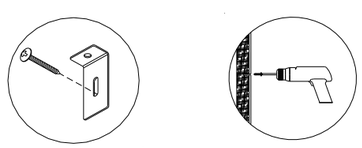

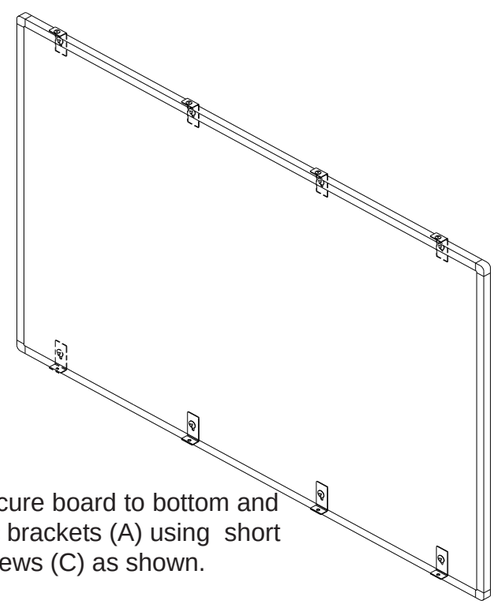

6 Secure board to bottom and top brackets (A) using short screws (C) as shown.

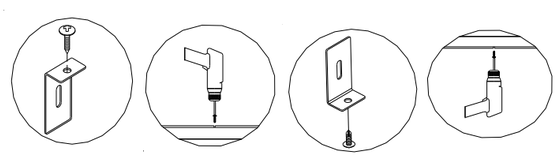

Parts List

P1	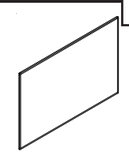	Board

Hardware List

A	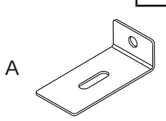	Angle Bracket
B	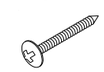	Long Screw
C		Short Screw
D		Screw Anchor-Concrete
E		Screw Anchor-Drywall

L Clip Install_05-29-13

Markerboard/Tackboard
L Clip Install

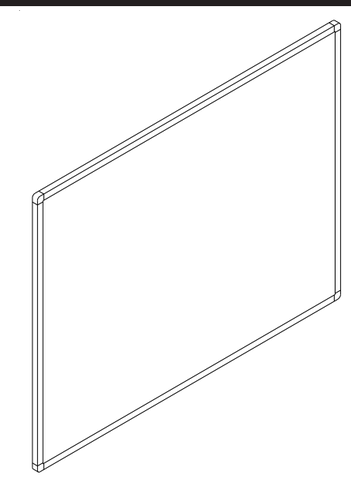

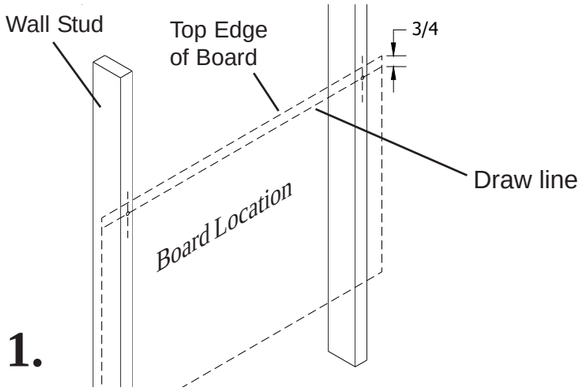

1.

Determine board location. Measure from floor to the top edge of board. Mark with pencil line the corner location. Measure down from top edge of board 3/4", and draw line as shown. Locate stud near each end of board and drill pilot hole along line using 1/8" drill bit.

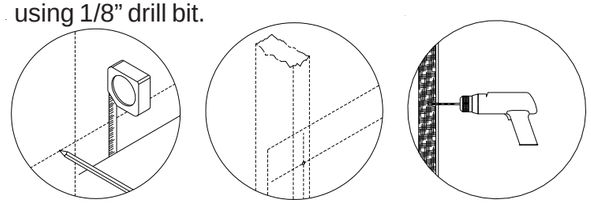

Note:
Install Masonry Anchors (D) into 1/4" Diameter predrill holes for masonry walls.

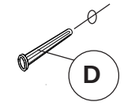

Install Drywall Anchors (E) into 1/4" Diameter predrill holes for sheet rock walls.

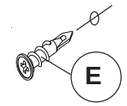

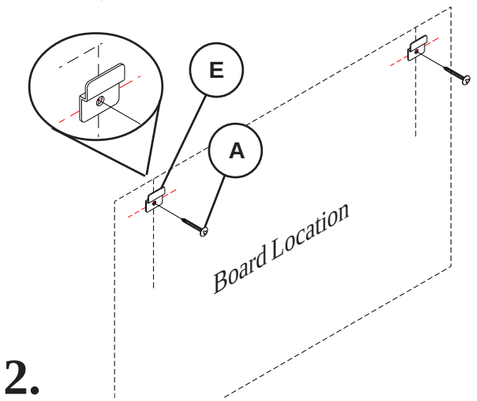

2.

Attach Z-Hangers (E) using Long Screws (A) as shown.

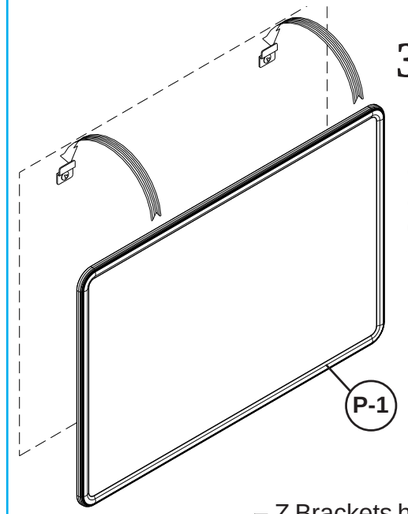

3.

Lift, Tilt, and Slide Board down over the Z-Hangers.
Z-Hangers should catch in the top trim on the back of the board.
Draw line along bottom edge of board.

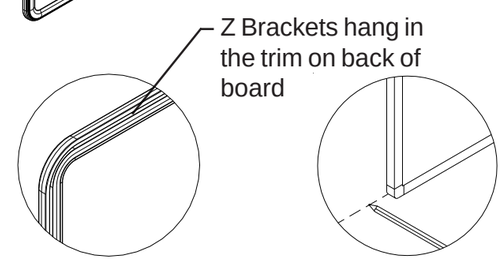

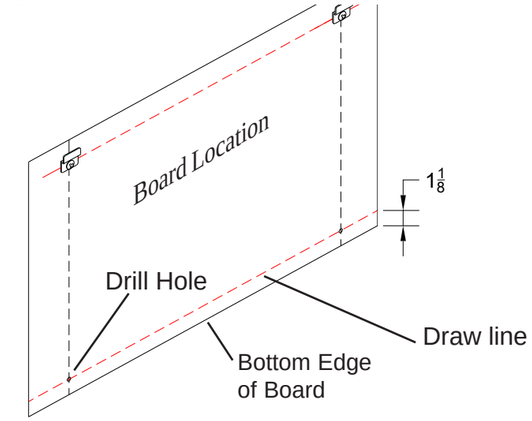

4.

Lift and remove board from the Z-Hangers.
Measure up from bottom line of board 1-1/8", and draw line as shown. Locate stud near each end of board and drill pilot hole along line using 1/8" drill bit.

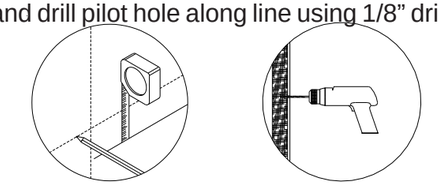

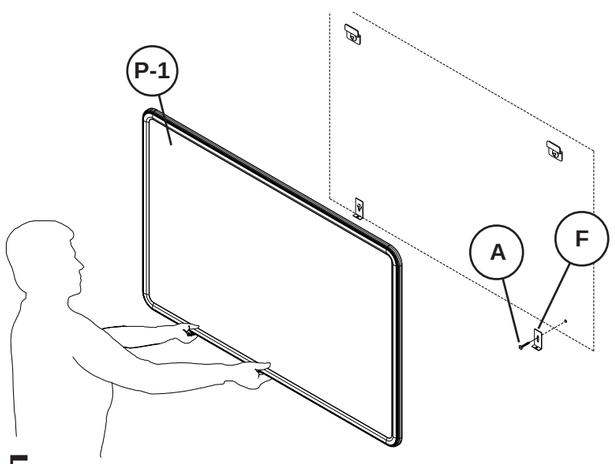

5. Secure 2 bottom brackets (F) to the wall using 2 long screws (A) as shown.
Hang board on the Z-Hangers (E).

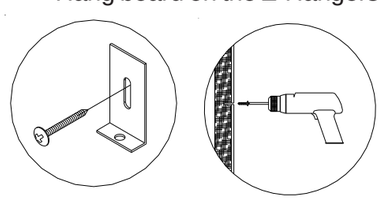

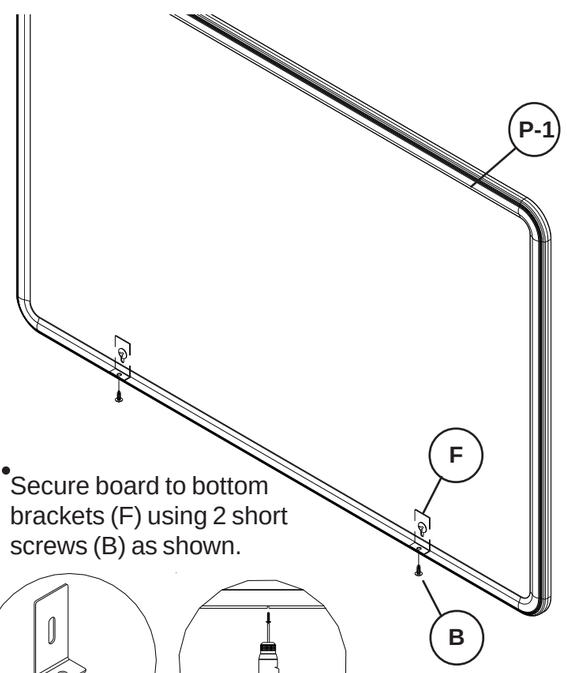

6. Secure board to bottom brackets (F) using 2 short screws (B) as shown.

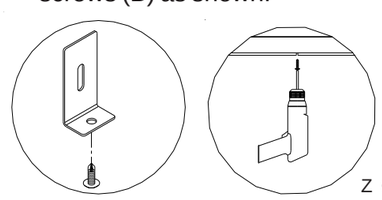

Z Clip Install_05-29-13

Parts List

P1	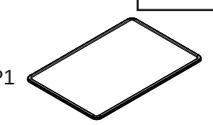	Board

Hardware List

A		Long Screw
B		Short Screw
C		Screw Anchor - Concrete (For Concrete walls)
D	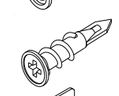	Screw Anchor - Drywall (For Drywall)
E		Z Hanging Bracket
F	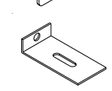	Bottom Bracket

Markerboard/Tackboard
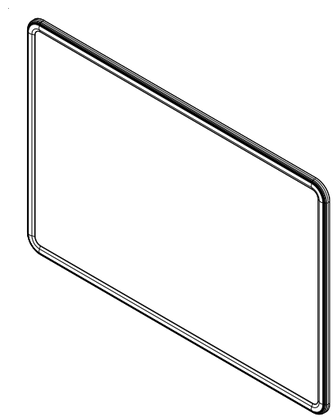
Z Clip Install